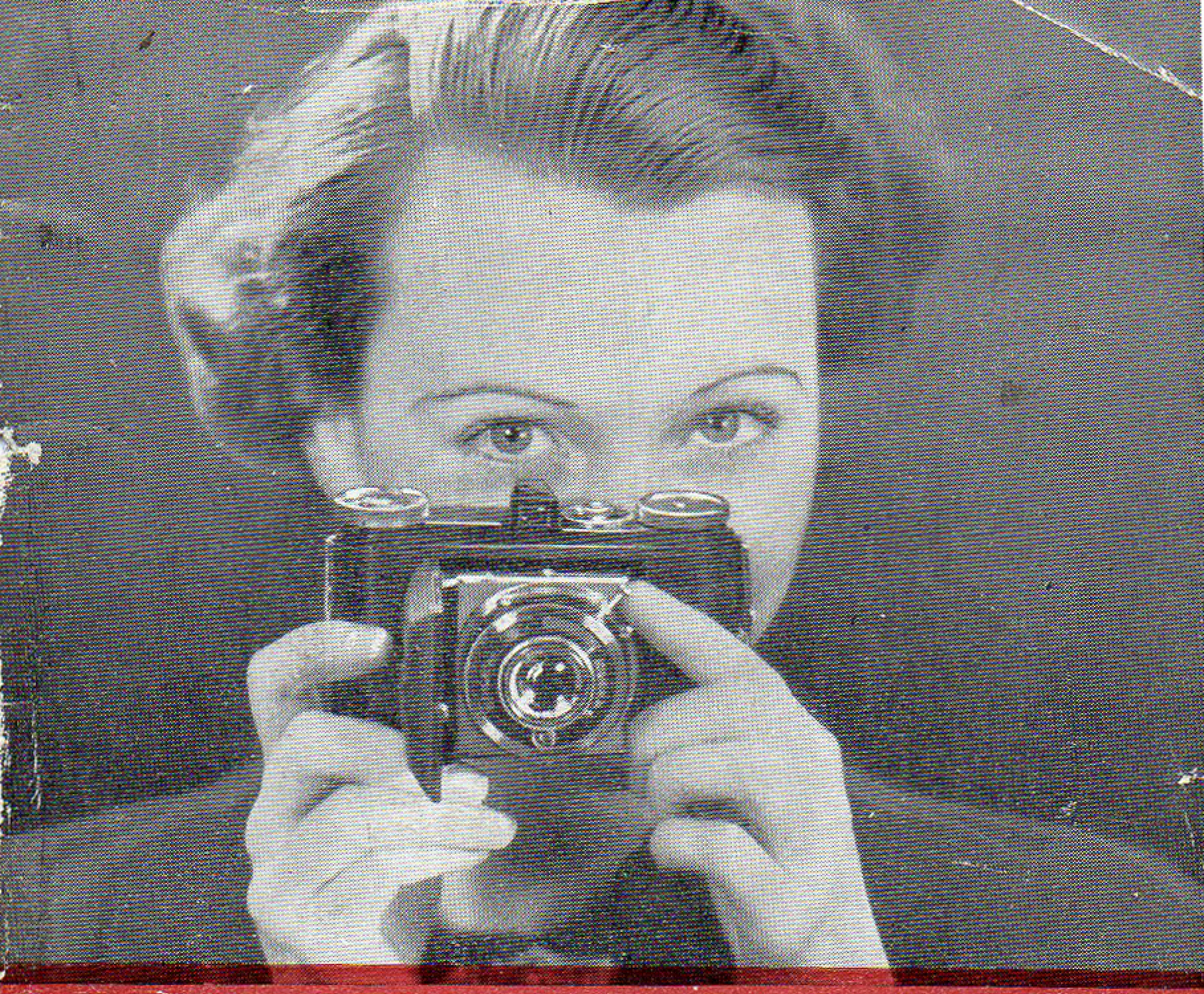

HOW TO USE THE "Retina"

A Kodak Product-Made in Germany

The "Retina" puts the world at your finger-tips. It will give you unusual, interesting, dramatic pictures. And it is very easy to use. Read this booklet carefully through; it tells you all you want to know about the "Retina".

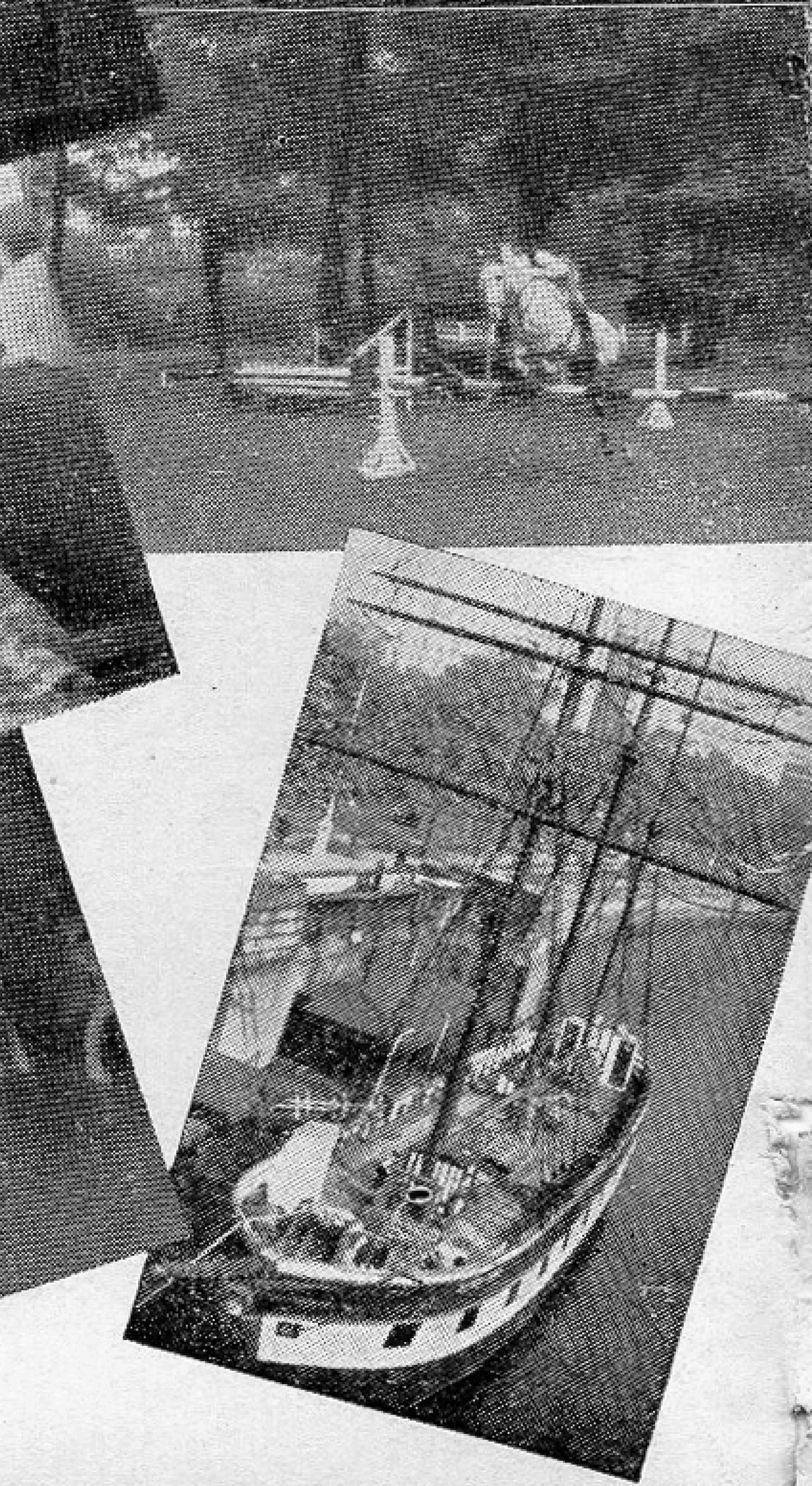

CONTENTS

List of Parts . . . . . 4—5
The Film to Use 6
Loading 7
Making the Exposure 10
Closing the Camera 16
Unloading 16
Depth of Focus Scale 19
Colour Filters and Auxiliary
Lenses . . . . . 20—23

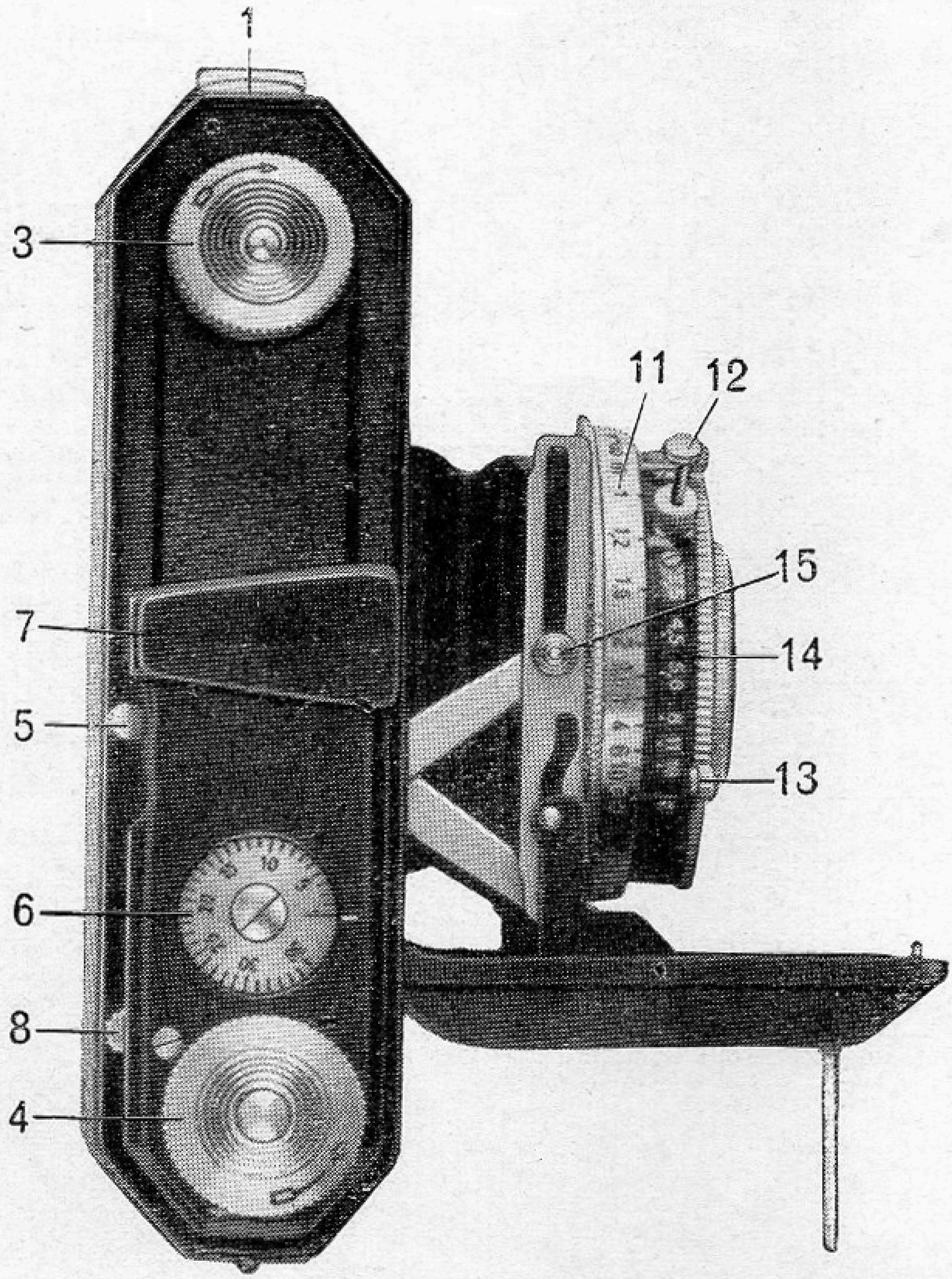

Fig. 1

LIST OF PARTS

1. Back latch.
2. Press button for opening front (page 12).
3. Film Rewind.
4. Winding Key.
5. Film Release Lever.
6. Exposure Counter.
7. Viewfinder.
8. Clutch.
9. Clutch in position R ("Rewind" Fig. 9, page 18).
10. Knob for turning focussing scale.
11. Focussing scale.
12. and 13. Shutter release.
14. Diaphragm scale.
15. Press Buttons for closing front.
16. Film Cassette (daylight loading and unloading) (page 9).
17. Take-up Spool (page 9).
18. Depth of focus scale (page 12).
19. Diaphragm Knob (page 12).
20. Shutter Setting Lever (page 12).

THE FILM TO USE

Kodak Film for use in the "Retina" is supplied in a special light-trapped metal cassette. This cassette holds 36 exposures and can be loaded and unloaded in daylight.

You have the choice of two fast panchromatic Kodak films for the "Retina": "Panatomic" and Super Sensitive Panchromatic. Both are double-coated and anti-halation backed.

"Panatomic" is a film of superfine grain. Negatives on "Panatomic" are remarkable for the way they will stand enlargement without showing any signs of grain or losing their original crispness. "Panatomic" is fully panchromatic — that is, sensitive to light of all colours including red — and as a result gives pictures of extraordinarily beautiful quality. Use "Panatomic" for all general purposes in the "Retina".

Ask for Kodak Film No. F 135

Kodak Super Sensitive Panchromatic Film has amazing speed. It is fast to daylight; to artificial light, because of its high red sensitivity, it is (relatively to other films) very fast indeed. Whenever you require extreme speed, especially for night photography, use Kodak Super Sensitive Panchromatic Film.

Ask for Kodak Film No. SS 135

INSTRUCTIONS FOR USING THE "RETINA"

Before loading your "Retina" with film it is advisable to become accustomed to holding the camera, focussing, and working the shutter. These operations are outlined on pp 10—16.

LOADING YOUR "RETINA".

Do not load the camera in direct sunshine.

Lift up the Back Latch 1 (Fig. 1) and open the back. Pull out the Film Rewind 3 (Fig. 2) as far as it will come. Now insert the Film Cartridge 16 (Fig. 3) so that the projecting spool-peg is on the opposite side to the Film Rewind. Push in the Film Rewind to its original position.

Thread the end of the film into one of the slits in the Take-up Spool 17 (Fig. 3) and turn the Winding Key 4 (Fig. 1) in the direction of its

arrow until the film lies flat in its groove between the spools.

Now close the back.

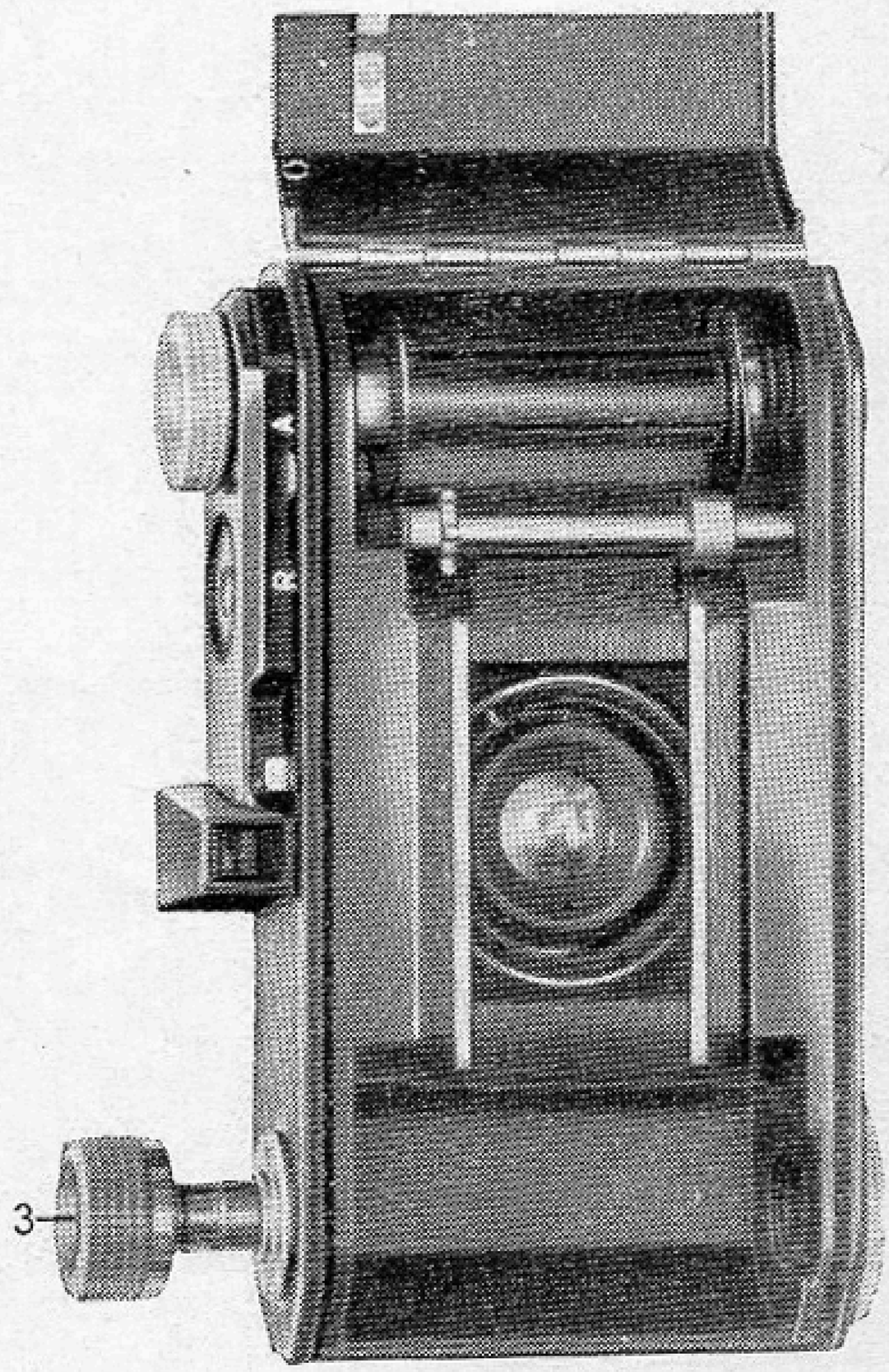

Fig. 2

The end of the film projecting from the Film Cassette was exposed to light when you loaded the camera. Un-

exposed film must be wound out of the Film Cassette into place behind the lens. Move the Film Release

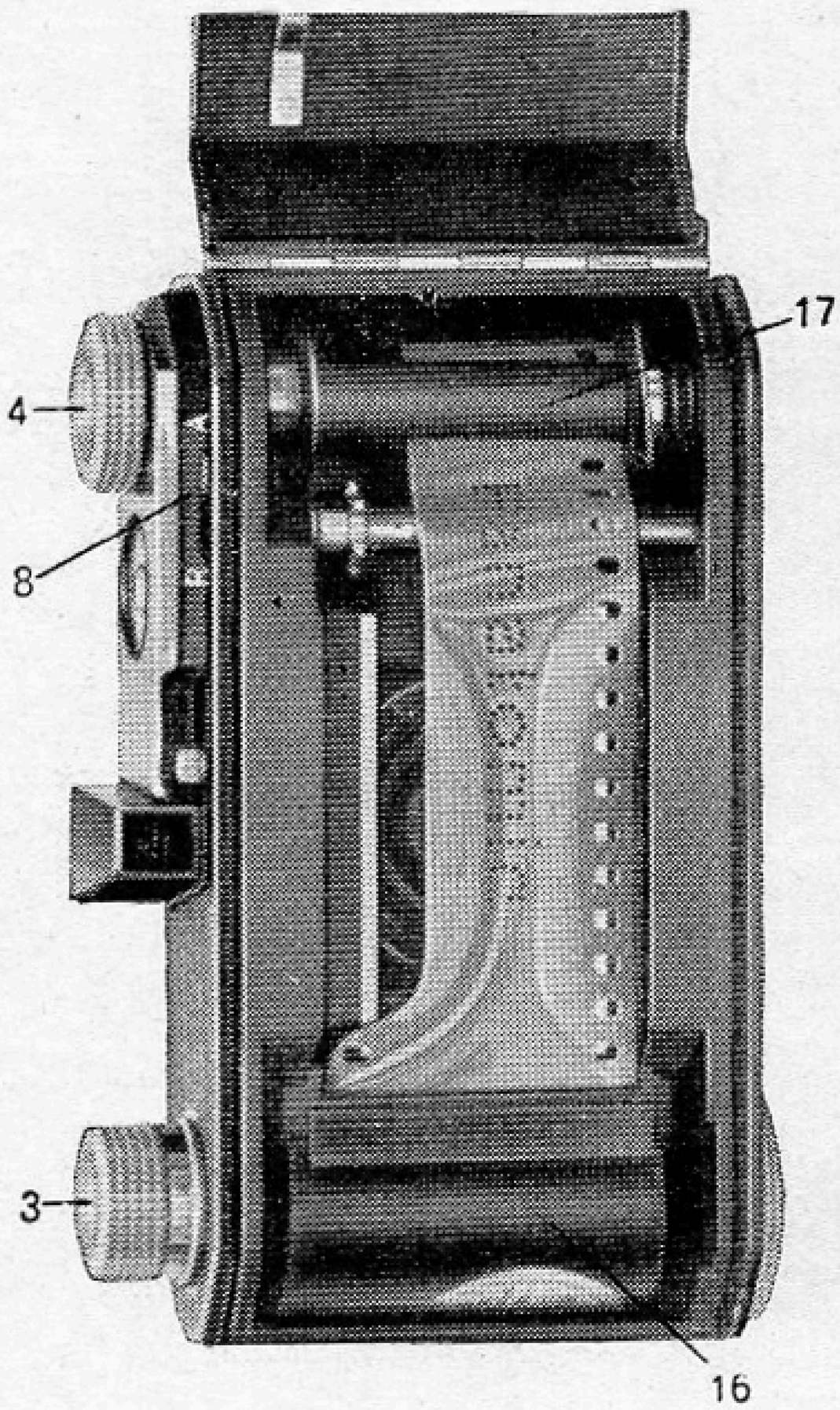

Fig. 3

Lever 5 (Fig. 1) to the right, then turn the Winding Key in the direction of the arrow until you hear a

faint click, when the Winding Key can be turned no further. Unexposed film is now ready behind the lens.

Set the Exposure Counter 6 (Fig. 1) by moving the Film Release Lever 5 backwards and forwards until the figure 1 on the dial is opposite the line pointing towards the front of the camera. You are now ready to make your first exposure.

MAKING THE EXPOSURE.

Open the front of the camera by pressing Button 2 (Fig. 4). The baseboard will spring open as Fig. 5 shows. Pull it down to its full extent, when it will snap into position.

Focus the lens by turning the Focussing Scale 11 (Fig. 1) which is graduated from ∞ ("Infinity") to 3.5 feet. The black scale is for use when the camera is held upright, the red scale for horizontal pictures. Set the figure representing your estimated distance in feet from the sub-

ject over the white engraved line on the shutter.

Set the diaphragm by moving Knob 19 (Fig. 4). Two Diaphragm Scales are provided so that you can read the lens aperture (or "stop") from above, whether you are taking vertical or horizontal pictures.

Set the shutter speed by turning the rim at the front of the shutter until the desired speed is opposite the engraved line above the middle of the word "Kodak".

The "Compur" shutter on the "Retina" gives instantaneous exposures of 1, 1/2, 1/5, 1/10, 1/25, 1/50, 1/100 and 1/300th second, "Brief-Time" exposures (B) and "Time" exposures (T). The "Compur Rapid" Shutter, in addition to these exposures, also gives 1/500th second. For all instantaneous exposures, i. e. 1 to 1/300th sec., (or 1/500th in the case of the "Compur Rapid" Shutter) set the shut-

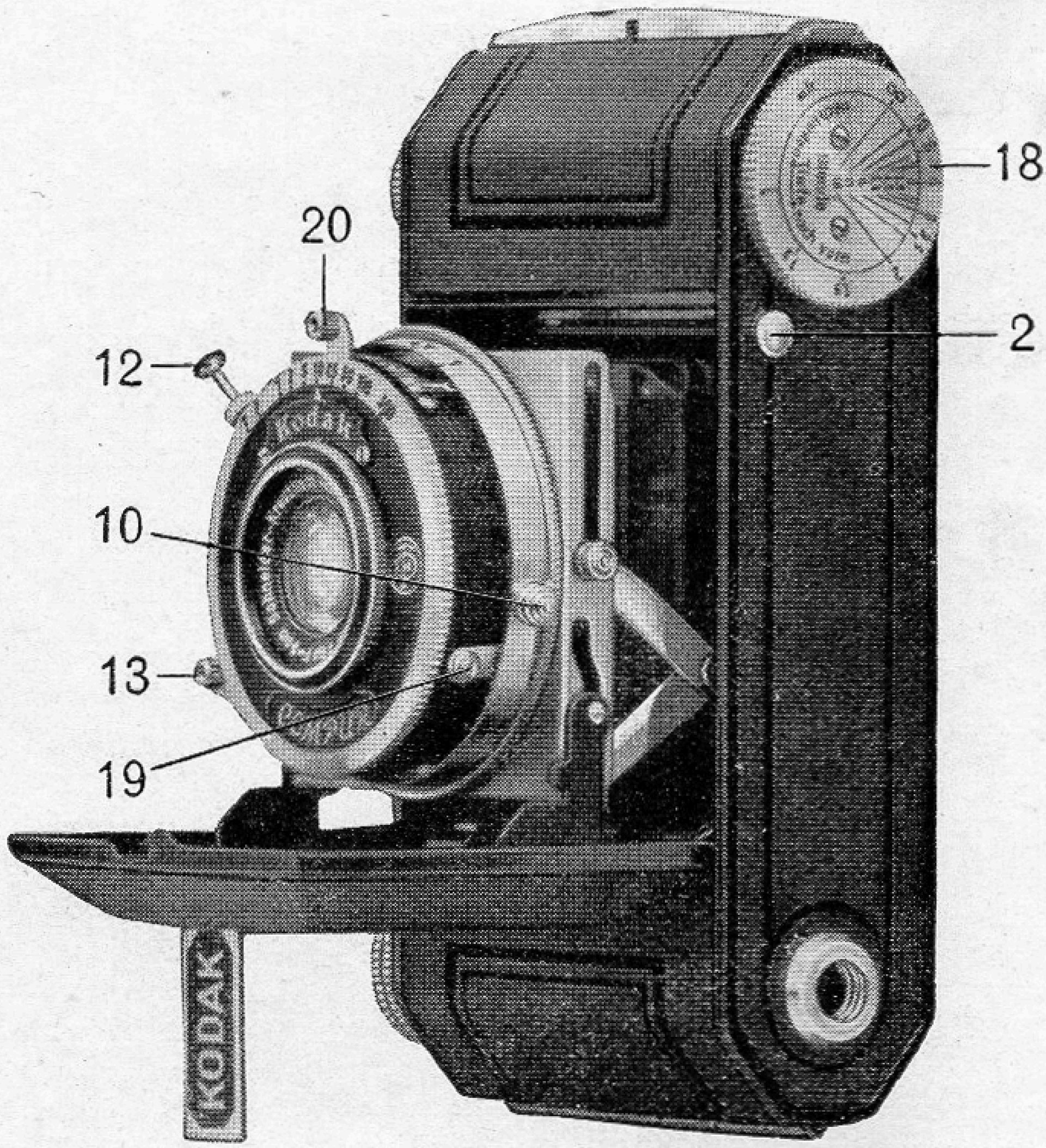

Fig. 4

ter by pushing the Lever 20 (Fig. 4) until it clicks to a stop over the middle of the word "Kodak". For "Brief-Time" and "Time" exposures this lever does not have to be set.

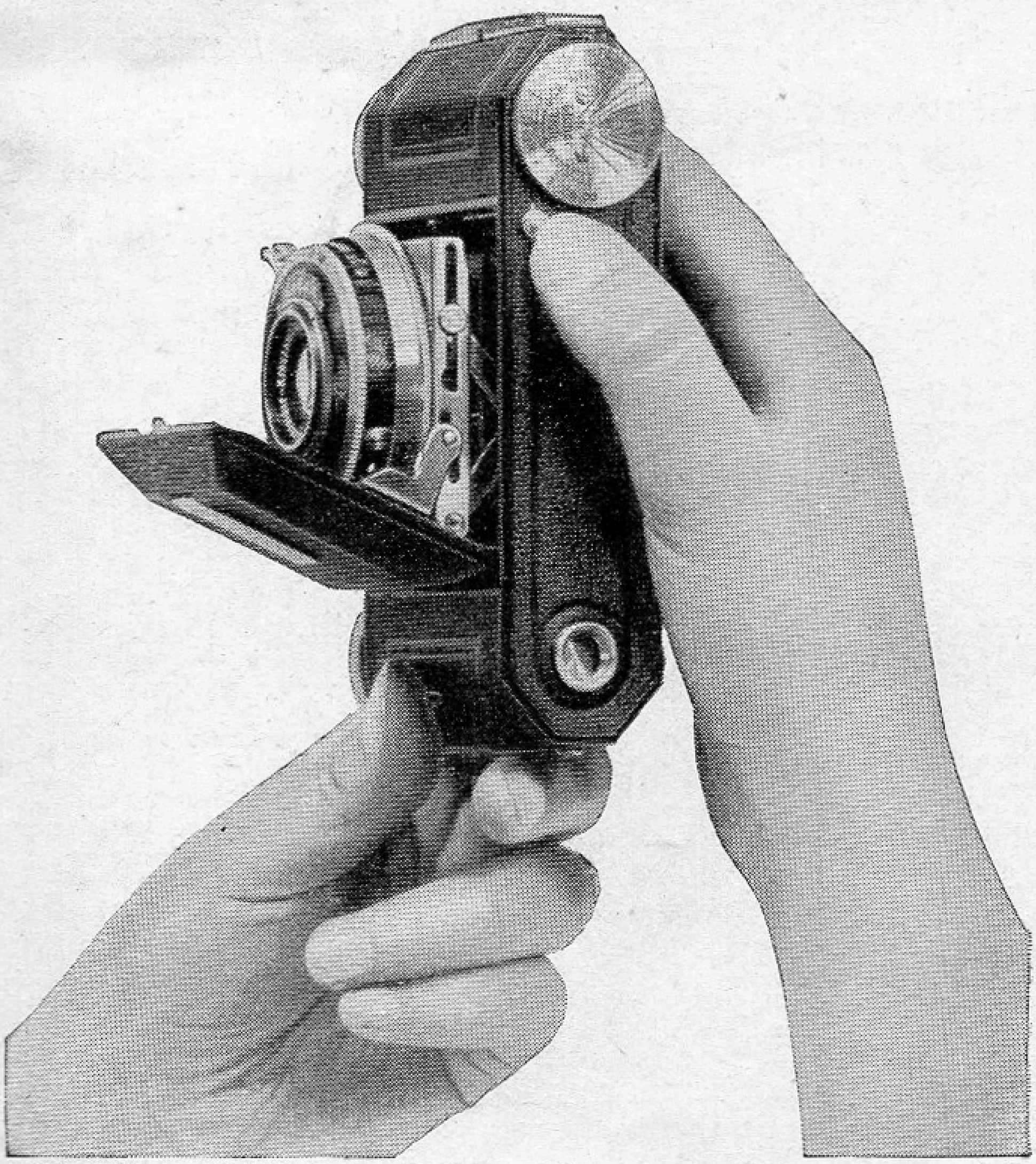

Fig. 5

Make the exposure by pressing on whichever of the two Shutter Releases 12 or 13 (Fig. 4) is the most convenient to your finger.

Intermediate settings are also pos-

sible betwen 1 and $^1/_{100}$ secs.; for instance, you can give an exposure of $^1/_{75}$th sec. by adjusting the shutter so that the indicating mark comes

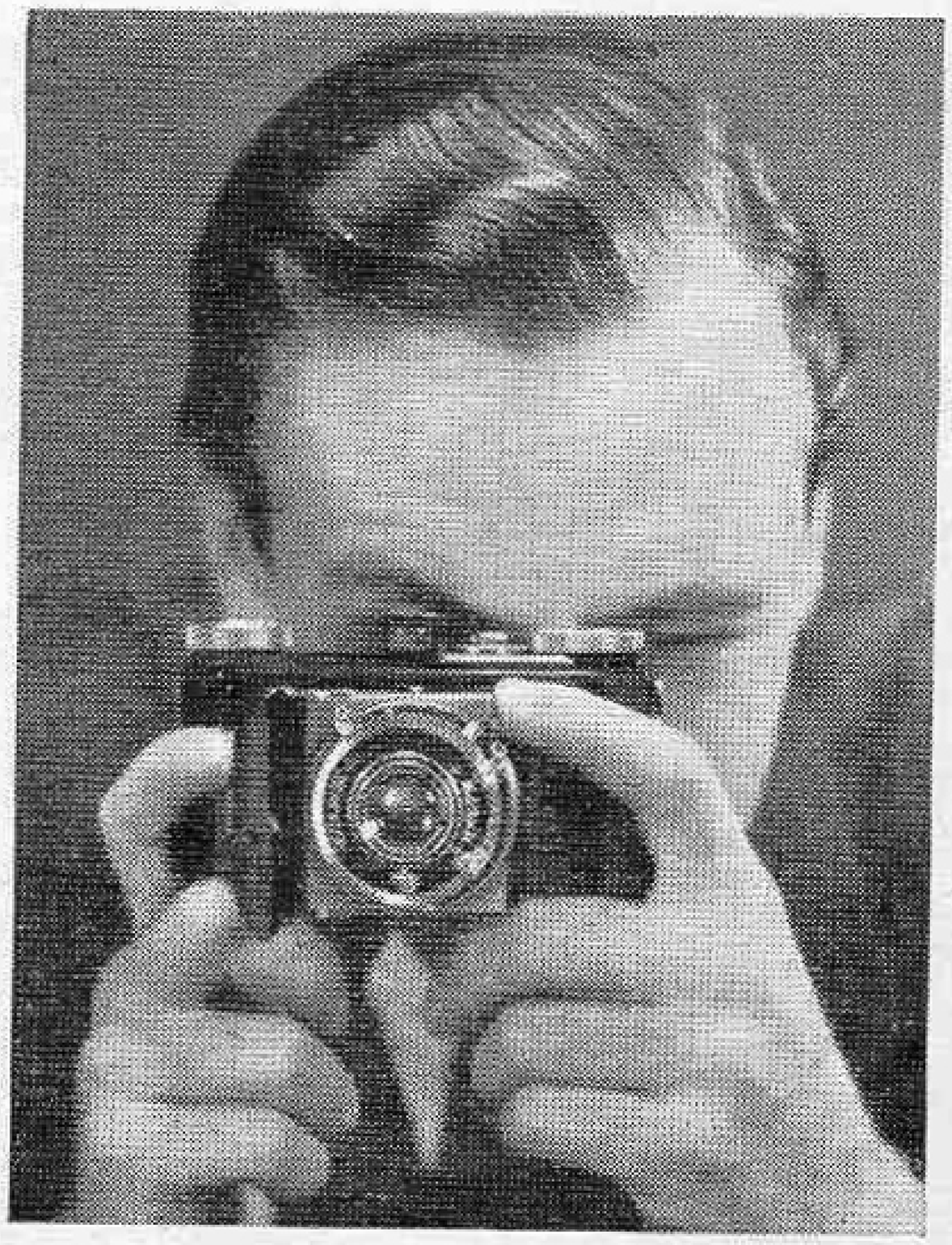

Fig. 6

between 50 and 100. Intermediate settings are *not* possible between $^1/_{100}$ and $^1/_{300}$ or between $^1/_{250}$ and $^1/_{500}$ secs. respectively.

Give a short exposure at a large aperture rather than a longer exposure

at a smaller aperture; it makes additionally sure of sharp pictures. 1/100th second is recommended wherever possible. The f 3.5 lens on the "Retina" has great depth of focus (records near and distant objects sharply at the same time) even at the larger apertures.

Fig. 7

While you make the exposure, hold the camera close against the face and look through the Viewfinder 7

(Fig. 1) as shown in Fig. 6 for horizontal pictures, or as in Fig. 7 for vertical pictures. The Finder shows what will appear on the film.

After every exposure wind on another unexposed length of film by moving the Film Release Lever 5 to the right and turning the winding key in the direction of the arrow until it will turn no further.

CLOSING YOUR "RETINA".

Before closing, the Focussing Scale 11 (Fig. 1) must be turned back to the mark "inf." (Infinity) otherwise you will strain the front of the camera.

Close the front by pressing in Buttons 15 (Fig. 1) on each side of the shutter, as shown in Fig. 8. Push up the front until the shutter and lens fold home and the front snaps shut.

UNLOADING YOUR "RETINA".

When the Exposure Counter points to 36, thirty-six pictures have been

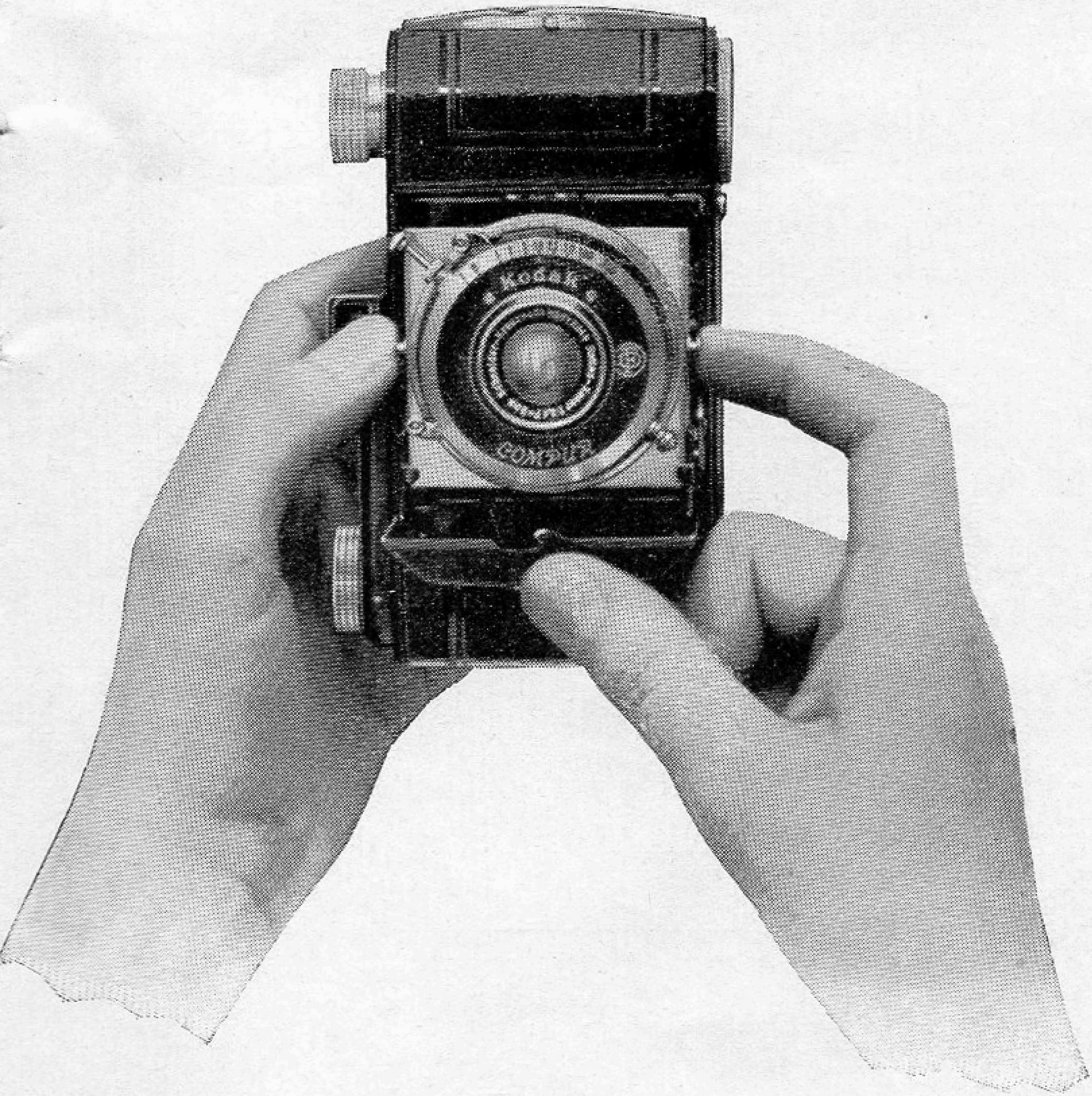

Fig. 8

taken. The film must then be re-wound into its Cassette. To do this move the Film Clutch to the letter

"R" (Rewind) as shown in Fig. 9. This uncouples the Winding Key from the Take-up Spool and enables you to turn the Film Rewind 3 (Fig. 1) until all the film is wound back off the

Fig. 9

Take-up spool into the Film Cassette 16 (Fig. 3). You know this is done when you feel the Film Rewind turning freely. Then you can undo the back of the camera in safety.

To remove the Film Cassette, open the Back by lifting the Back Latch 1 (Fig. 1) and pull out the Film Rewind 3 (Fig. 2) as far as it will go, when the Film Cassette will shake out easily.

Replace the Film Cassette containing the exposed film in the aluminium canister in which it came to you, as soon as you remove it from the camera.

Do not unload the camera in direct sunshine.

DEPTH OF FOCUS SCALE.

The depth of focus scale 18 (Fig. 4) tells you between what distances a subject is in sharp focus.

For example, if the camera is focussed upon 8 feet, turn the outer ring of the depth of focus scale until the figure 8 comes opposite the index mark. Then you will see that at stop 3.5 the range of sharpness extends from 9 feet to 7.5 feet, at 5.6, from approximately 10 feet to 7 feet, and so on.

COLOUR FILTERS AND AUXILIARY LENSES FOR THE "RETINA"

Colour Filters.

"Panatomic" and Kodak Super Sensitive Panchromatic Films reproduce nature's colours in very nearly their correct black-and-white relationships. Still more correct colour rendering — and therefore more beautiful quality — can be obtained by using a "Retina" Colour Filter in front of your lens, white distant views will be reproduced with less visible haze.

"Retina" Colour Filters are supplied in small metal 'cells' that screw on to the front of the lens so closely that the camera can be closed with the filter in position.

"Retina" Colour Filters are made in four grades: —

Light Yellow. — for use in daylight when short exposure is of more importance than full colour correction. Increases daylight exposure necessary 2 times. Is not suitable for artificial light exposures.

Medium Yellow — gives greater colour correction by daylight than the Light Yellow Filter. Increases exposure necessary $2^1/_2$ times. Is not suitable for artificial light exposures.

Green — gives full colour correction by daylight and by artificial light. Increases daylight exposure necessary 3 times and artificial (tungsten) light exposure 2 times.

Orange — gives slightly exaggerated colour correction by daylight. Increases daylight exposure necessary 5 times. Not recommended for artificial light exposures.

The full series of Wratten Filters can also be obtained for the "Retina". They are, however, not supplied in close-fitting cells that enable the camera to be closed with the filter in position.

Auxiliary Lenses.

The "Retina" normally focusses down to 3½ feet. For extra large 'close-ups' of small objects you can get as near as 21 inches with Auxiliary Lens No. 1 and 16 inches with Auxiliary Lens No. 11. They give you an image approximately twice and three times as large respectively as you would get at 3½ feet without their use.

These Auxiliary Lenses, like the Colour Filters described above, screw on in front of the "Retina" Lens. The camera can be closed with either of these Auxiliary lenses in position. In addition, any "Retina" Colour Filter can be screwed on top of either of the Auxiliary Lenses, though in this case the camera cannot be closed without first removing the colour filter.

"Retina" Colour Filters and Auxiliary Lenses can be obtained from your Kodak Dealer.

FOCUSSING-TABLE
FOR
RETINA AUXILIARY LENSES

Auxiliary Lens No. I

With the focussing scale set at:	Distance from lens to subject should be:	Overall size of subject should not exceed:	Reduction in actual size of subject will be:
Inf.	$42^1/_2$ in.	$29^1/_8 \times 19^3/_8$ in.	20.5×
20 feet	$36^5/_8$,,	$24^3/_4 \times 16^1/_2$,,	17.5×
13 ,,	34 ,,	$23 \times 15^3/_8$,,	16.2×
10 ,,	32 ,,	$21^3/_4 \times 14^1/_4$,,	15.3×
8 ,,	$30^3/_8$,,	$20^1/_2 \times 13^5/_8$,,	14.4×
7 ,,	28 ,,	$18^3/_4 \times 12^1/_2$,,	13.2×
5 ,,	$24^5/_8$,,	$16^3/_8 \times 10^7/_8$,,	11.5×
4 ,,	$22^1/_2$,,	$14^3/_4 \times 9^3/_4$,,	10.4×
3,5 ,,	$20^1/_2$,,	$13^3/_8 \times 8^7/_8$,,	9.4×

Distances should be measured from the front of the auxiliary lens to the subject. It is advisable to stop down to f. 5,6.

FOCUSSING-TABLE
FOR
RETINA AUXILIARY LENSES

Auxiliary Lens No. II

With the focussing scale set at:	Distance from lens to subject should be:	Overall size of subject should not exceed:	Reduction in actual size of subject will be:
Inf.	$26^3/_4$ in.	$18^1/_4 \times 12^1/_8$ in.	12.9×
20 feet	$23^3/_4$,,	$15 \times 10^5/_8$,,	11.3×
13 ,,	$22^5/_8$,,	$15^3/_8 \times 10^1/_4$,,	10.8×
10 ,,	$21^5/_8$,,	$14^1/_2 \times 9^5/_8$,,	10.2×
8 ,,	21 ,,	$14 \times 9^3/_8$,,	9.9×
7 ,,	20 ,,	$13^3/_8 \times 8^7/_8$,,	9.4×
5 ,,	$18^1/_2$,,	$12^1/_4 \times 8^1/_8$,,	8.6×
4 ,,	$17^1/_8$,,	$11^1/_4 \times 7^1/_2$,,	7.9×
3,5 ,,	$15^3/_4$,,	$10^1/_4 \times 6^3/_4$,,	7.2×

It is not necessary to increase time of exposure when using an auxiliary lens.

Use KODAK FILM in your "Retina"

For superb quality pictures and big, clear, grain-free enlargements —

Use "PANATOMIC" *the film of superfine grain.*

Fully panchromatic; double-coated; anti-halation backed.

For all night-time pictures by artificial light, indoors and out, and whenever you want maximum speed —

Use KODAK SUPER SENSITIVE PANCHROMATIC *the film of lightning speed*

Fully panchromatic; double-coated; anti-halation backed.

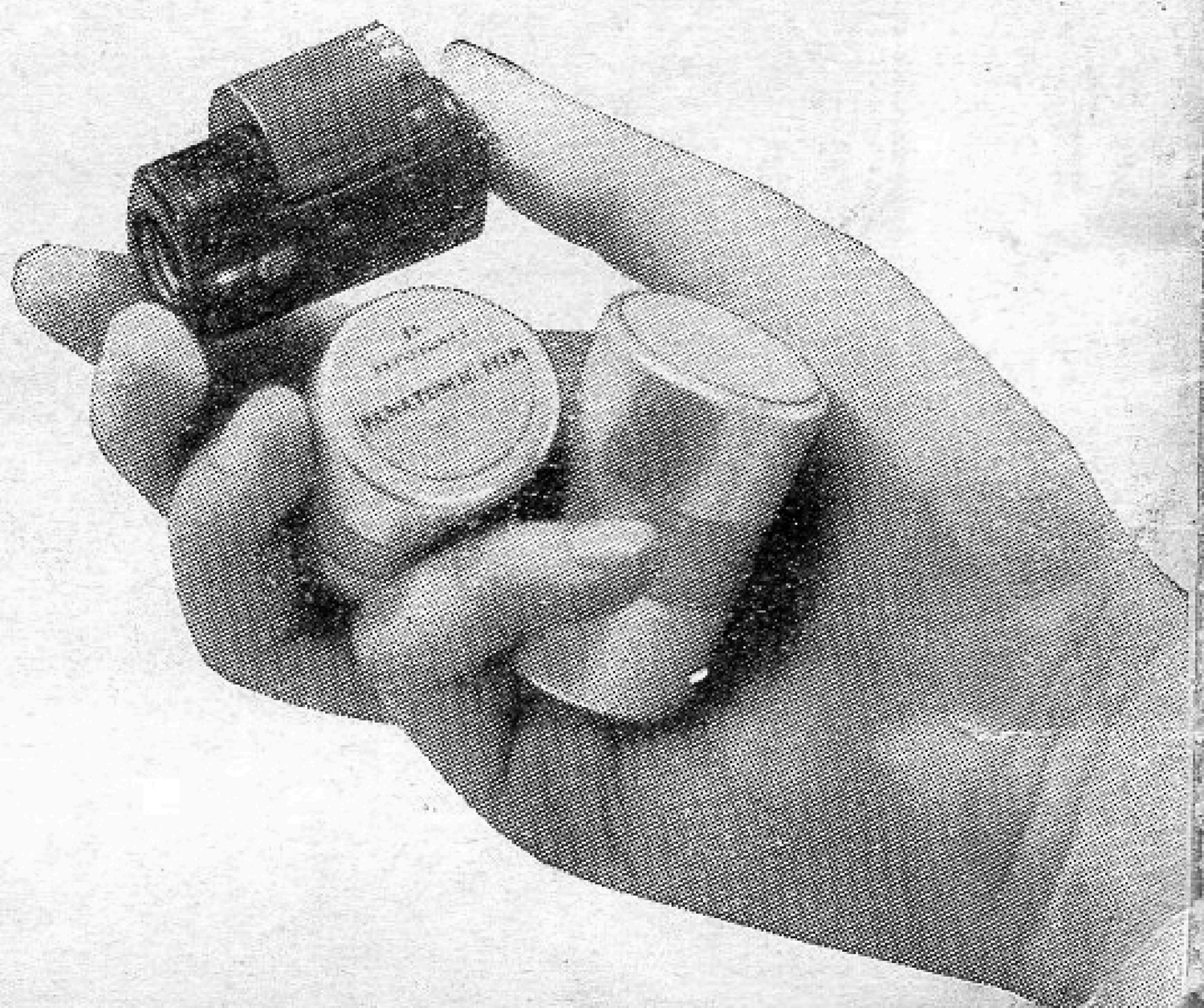

5371